# Erosion and Sediment Control Measures

## Silt Fence

Silt Fence is a sediment control structure, made of geotextile fabric, that restricts the movement of disturbed soil.

- Install before upslope excavation or grading begins.
- Place along the contour of the land and at least five feet from the base of the slope.
- Cut a trench six (6) inches deep and bury the bottom eight (8) inches of the fabric.
- Stretch the fabric tight, placing the support stakes on the downslope side every five (5) feet apart.
- Backfill the trench and compact the soil.
- All soil stockpiles must have silt fence placed around them to prevent soil erosion.
- Inspect once a week and after each storm event.

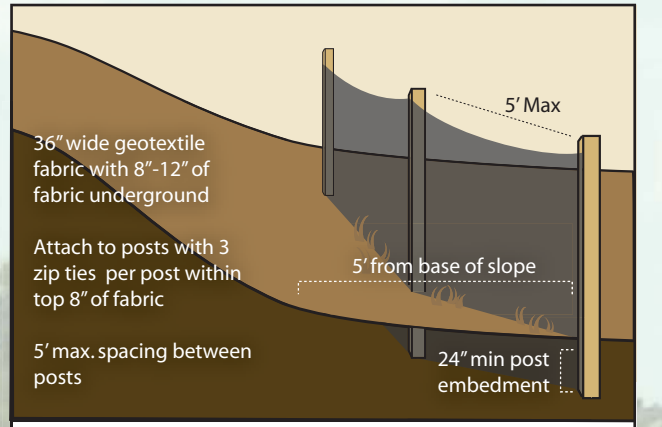


**Silt Fence Installation**

## Temporary Seeding

Temporary seeding is an erosion control practice that is needed on all bare areas to provide protection against soil movement. It is not intended to be a permanent lawn seeding, but rather a temporary erosion control practice.

- Seeding must to be completed within seven (7) days on areas that are not planned to be disturbed within 14 days.
- All soil stock piles must be temporarily seeded.
- Apply as early in the day as possible, but no later than the end of the day, to benefit from moisture still in the surface layer.
- Protect with straw mulch at the rate of 500 lbs. per 1/4 acre.

## Mulch

Areas of exposed soils that will not be worked for 14 days must be covered. Mulch provides immediate protection to exposed soils during periods of short construction delays, steep slopes, or over winter months through the application of plant residues and other suitable materials.

| Mulch Material | Quality Standards | Application Rates |
|---|---|---|
| Straw | Air Dried; Free from undesirable seed and coarse material | 2"-3" thick, 2-3 bales per 1000 SF or 2-3 tons per acre |
| Wood Fiber Cellulose | No growth inhibiting factors | Approx. 25-30 lbs. per 1000 SF or 1000-1500 lbs. per acre |
| Compost | No visible water or dust during handling. Must be purchased from supplier with Solid Waste Handling Permit | 2" thick min.; approx. 100 tons per acre (approx. 800 lbs. per yard) |
| Chipped Site Vegetation | Average size shall be several inches | 2" minimum thickness |

**Mulching Standards**

## Plastic

Plastic sheeting may be used to cover exposed slopes that require immediate protection from erosion. Stock-piled soil that will not be used within 24 hours should also be covered.

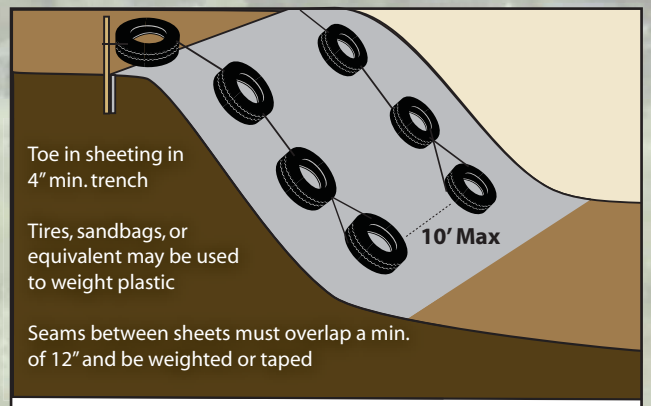


**Plastic Cover Installation**

## Construction Entrance

A construction entrance is a graveled area located where vehicles enter and leave a land disturbance site. Construction entrances provide an area where mud can be removed from vehicle tires before entering a public road. The motion of the vehicle as it moves over the gravel construction material dislodges the caked mud.

- Construct the drive at least ten (10) feet wide and at least twenty (20) feet long.
- Place two (2) to four (4) inch stone over a geotextile fabric on a stable subgrade. A geotextile fabric is placed beneath the rock to prevent sediments from migrating through the rock pad.
- Add stone as needed to maintain six (6) inches of clean depth.
- A pipe or culvert should be constructed under the entrance (if needed) to prevent surface water flowing across the entrance.
- Immediately clean up tracking in the street with a broom or shovel. DO NOT use water to clean pavement.

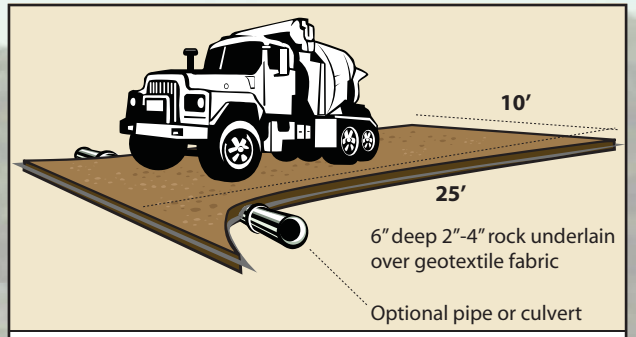


**Construction Entrance**

## Washout Location

Concrete truck washout location must be designated and placed within areas where the wash water will not impact any wetlands, ponds, creeks, lakes or stormwater facilities.

Other approved Best Management Practices (BMP's) may include using storm inlet protection, erosion control blankets, biologs, riprap, seeding, sodding, or vegetative filter buffers.

Inside this brochure you'll find some examples of Best Management Practices (BMPs) that should be included in your ESC Plan. These BMPs should be illustrated on your plan, and the specifications included in this brochure should be attached as well. In addition to these Erosion and Sediment Control measures, care should be taken to handle postconstruction stormwater runoff.

**Additional Information**

- **NPDES (Storm Water) Permits**
Minnesota Pollution Control Agency
**www.pcs.state.mn.us\water\stormwater-c.html**

- **Emergency Spill Response**
Minnesota Pollution Control Agency
1.800.422.0798

# Erosion & Sediment Control Measures

## For Lots Less Than One Acre